Rounds 1 & 2 Thursday & Friday, January 28 & 29, 2021

SHOTLINK

Farmers Insurance Open

REVISED

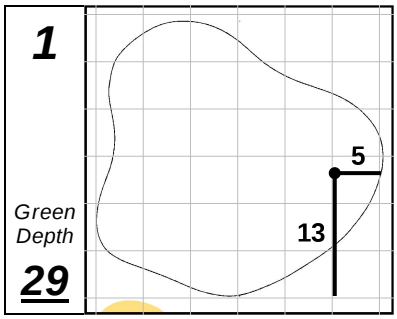

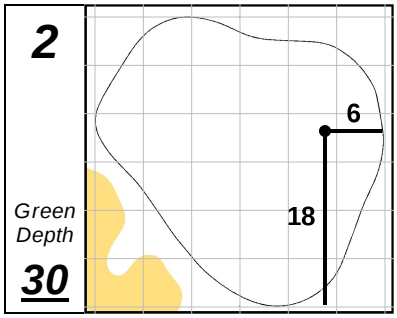

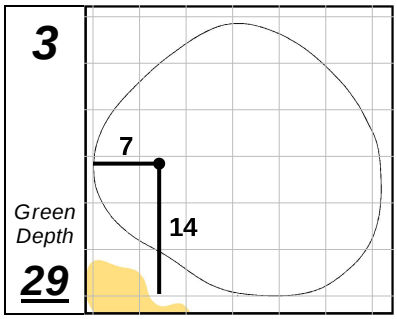

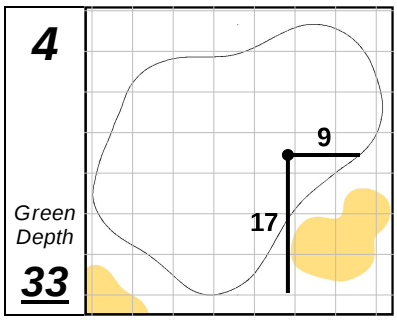

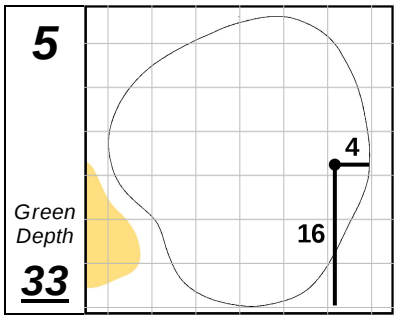

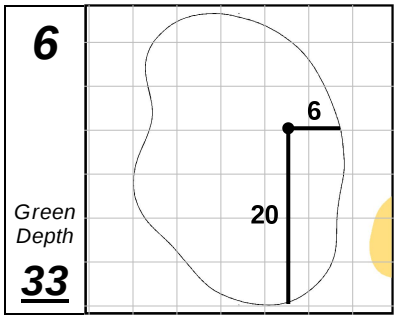

REVISED

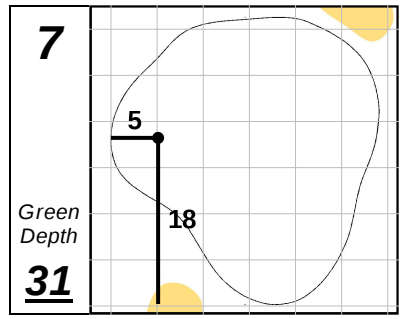

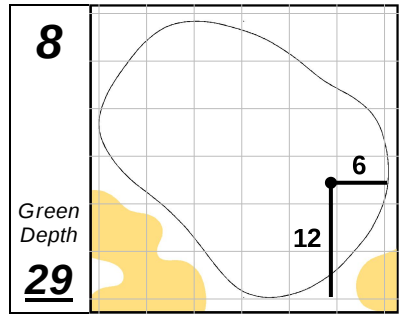

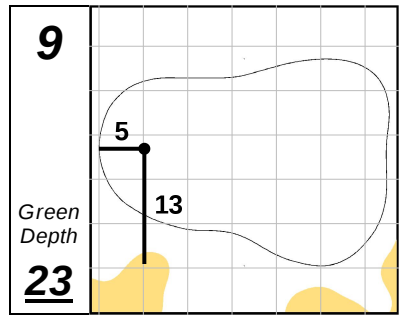

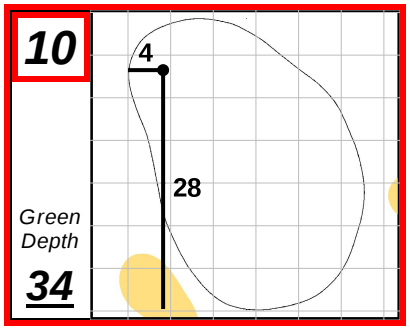

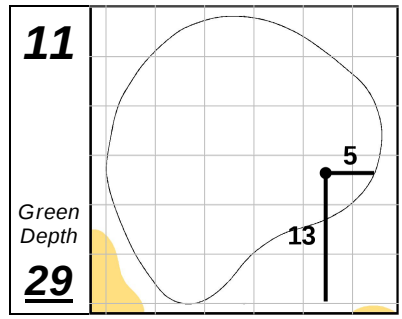

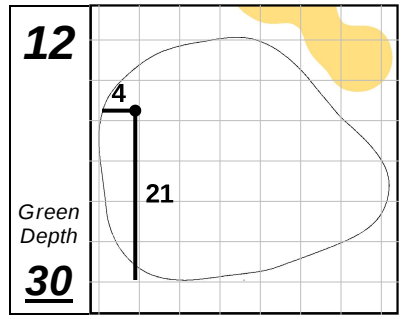

Torrey Pines GC (North)

REVISED

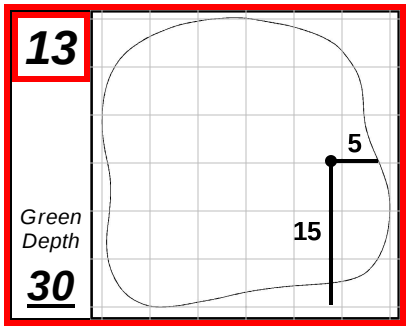

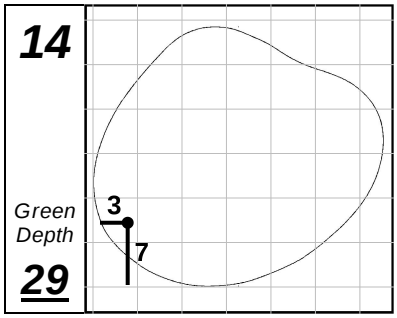

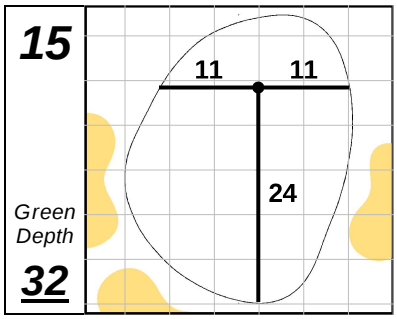

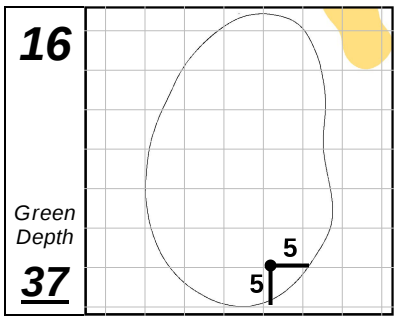

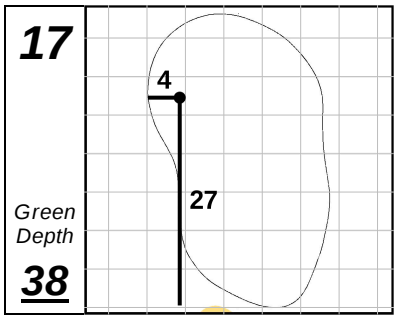

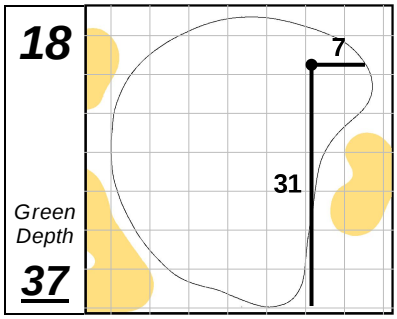

REVISED

Each side of a complete square on the green represents 5 YARDS.

Thursday, January 28, 2021 11:01 AM